Name_____

VOLUME OF A RECTANGULAR PRISM #1

Directions: Find the volume of each prism below. The formula to calculate the volume of a rectangular prism is volume = length x width x height. Write your answer in the space provided.

1)

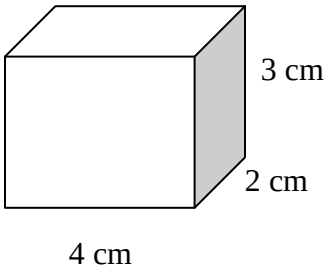

Area _____

2)

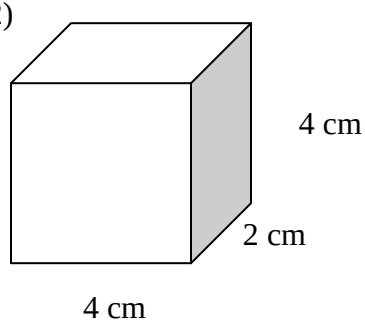

Area _____

3)

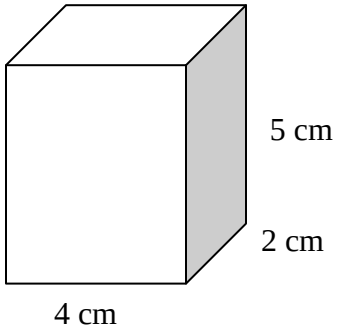

Area _____

4)

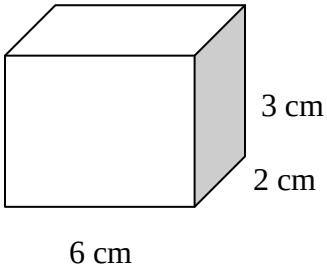

Area _____

5)

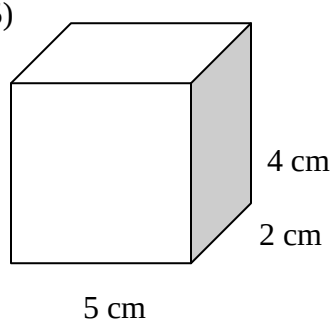

Area _____

6)

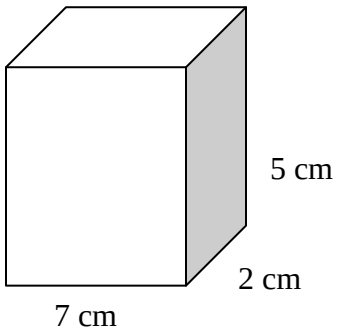

Area _____

7)

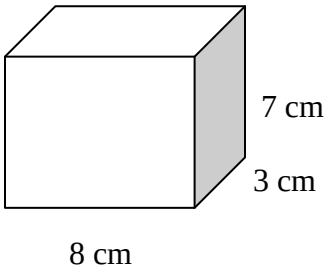

Area _____

8)

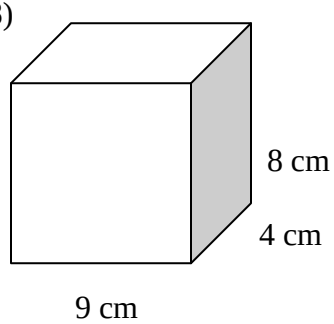

Area _____

9)

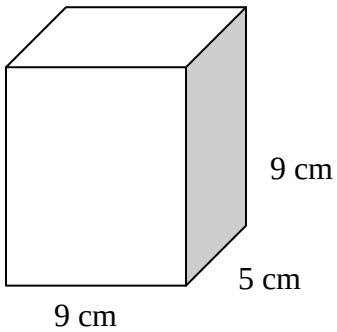

Area _____